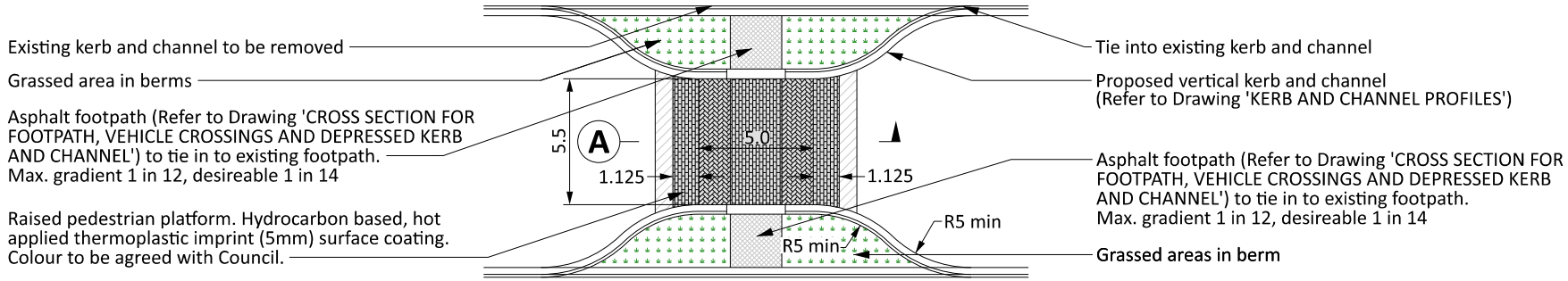

DETAIL A: TYPICAL RAISED PEDESTRIAN PLATFORM - WITH KERB EXTENSIONS
not to scale

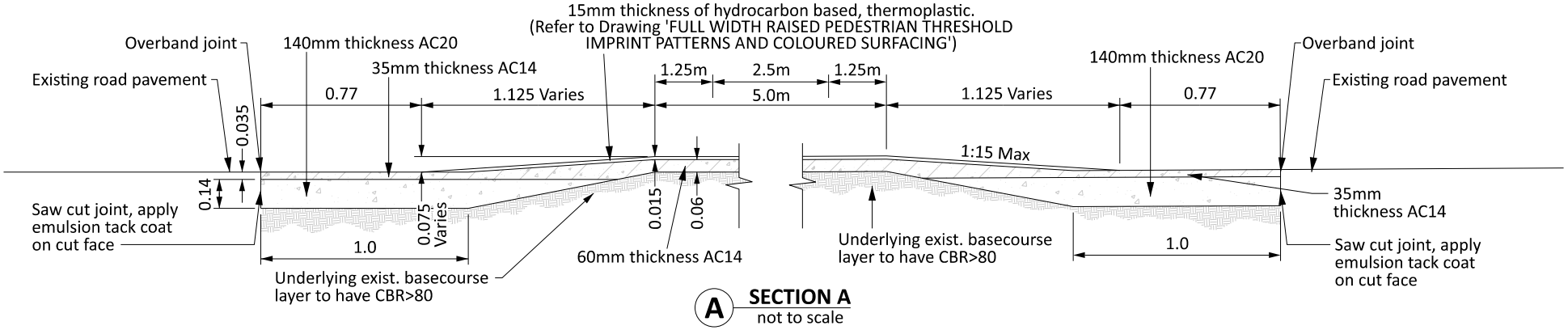

ASPHALTIC CONCRETE TAPERED RAISED PEDESTRIAN RAMP