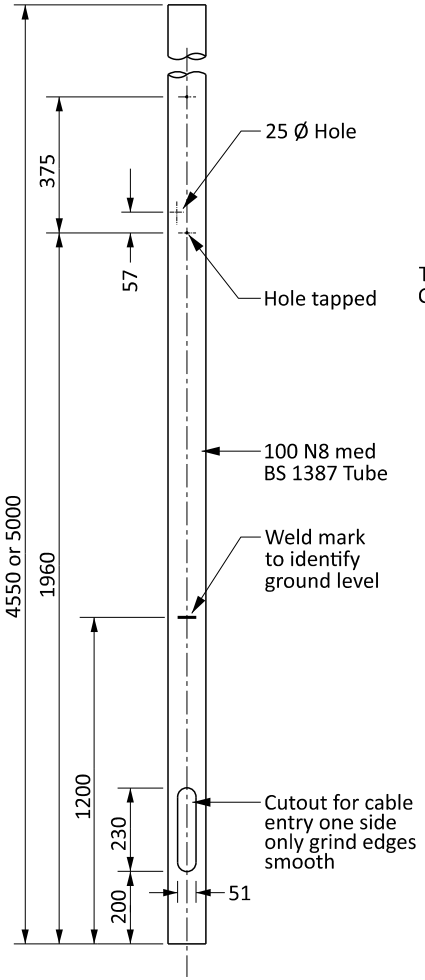

TRAFFIC SIGNAL POLE
ELEVATION

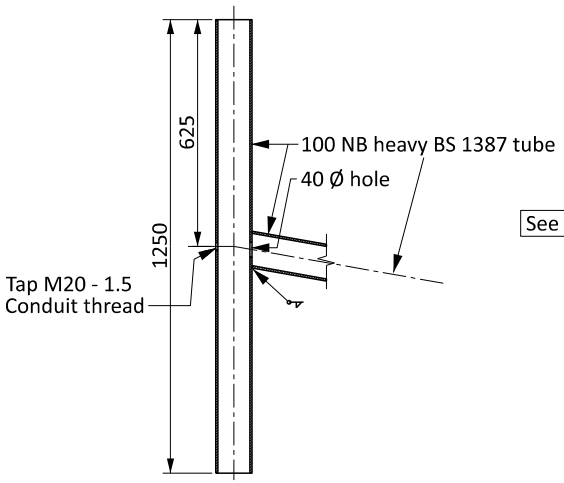

DETAIL 2
LANTERN SUPPORT ASSEMBLY

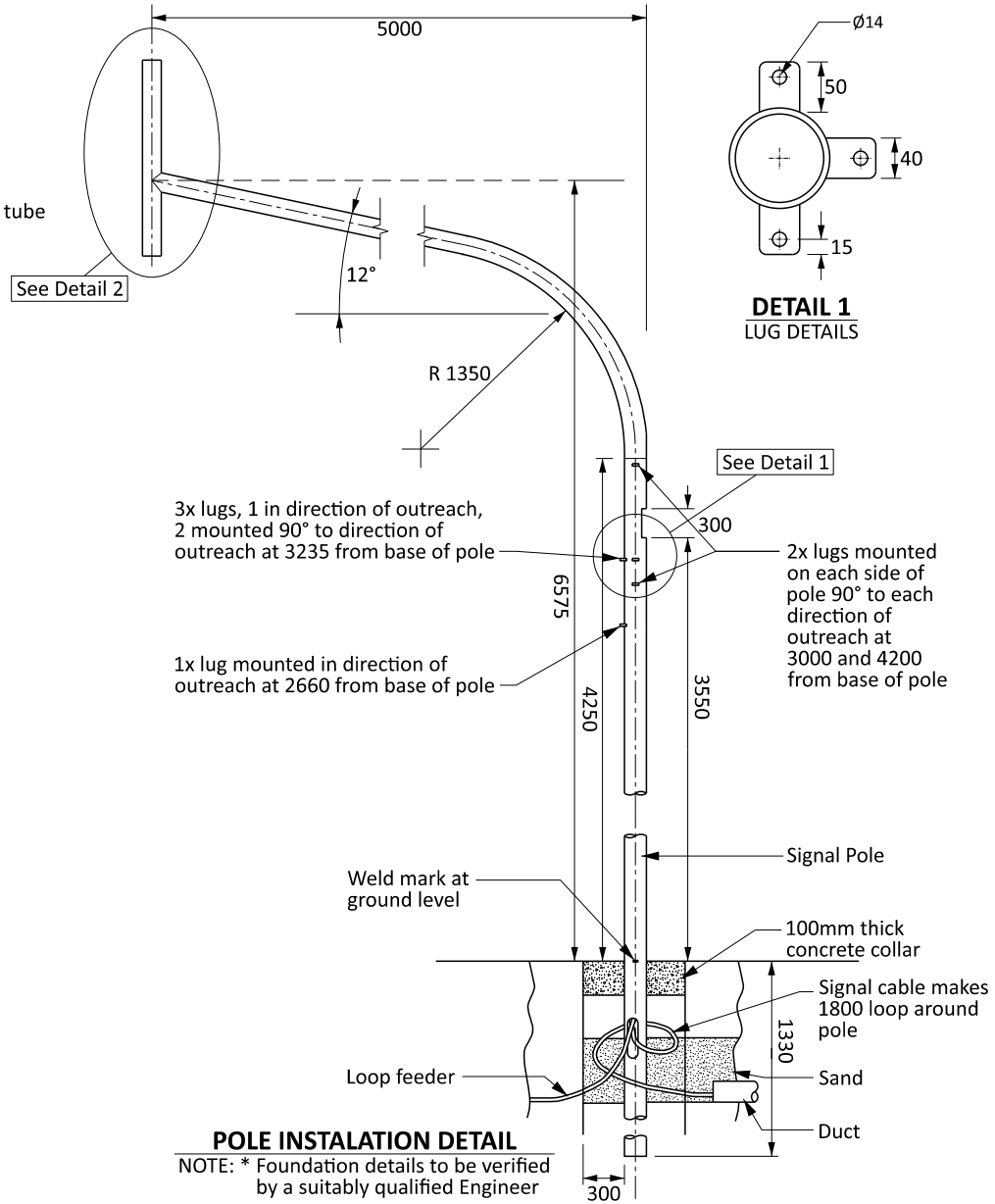

DETAIL 1
LUG DETAILS

POLE INSTALATION DETAIL
NOTE: * Foundation details to be verified
by a suitably qualified Engineer

CO-LAB
BETTER TOGETHER

TRAFFIC SIGNAL POLE AND MAST ARM