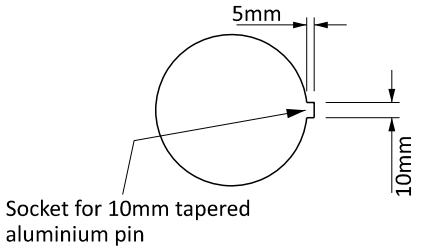

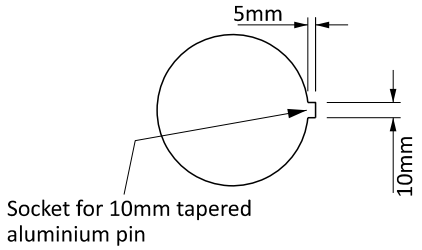

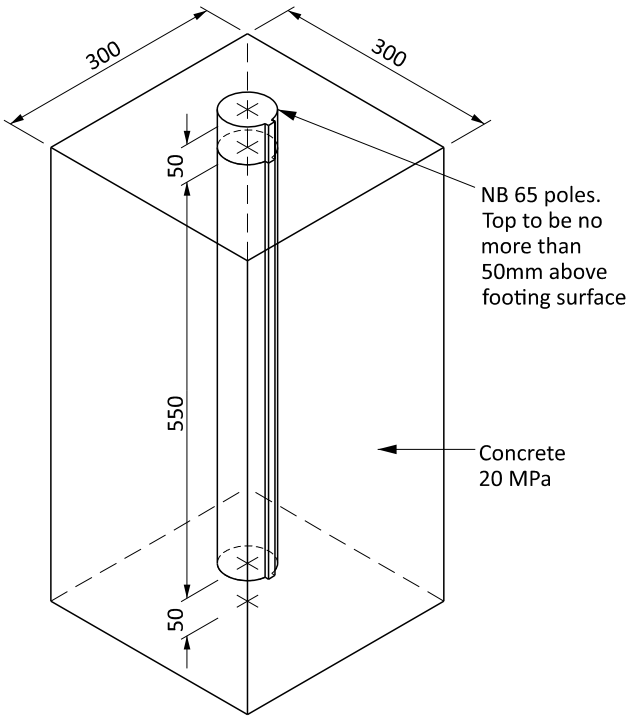

This detail only to be used for Real Time Bus signage or at request of Councils Engineer.

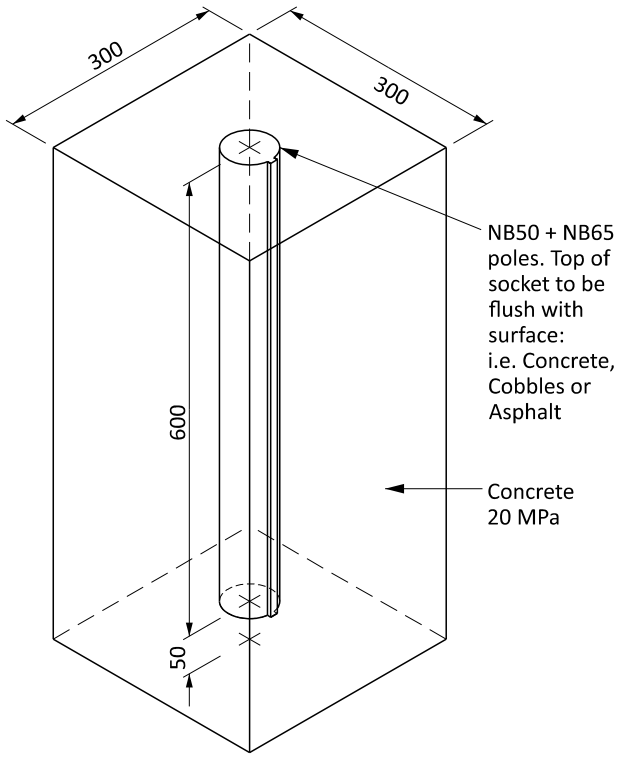

GROUND SOCKETS FOR REMOVABLE POLES