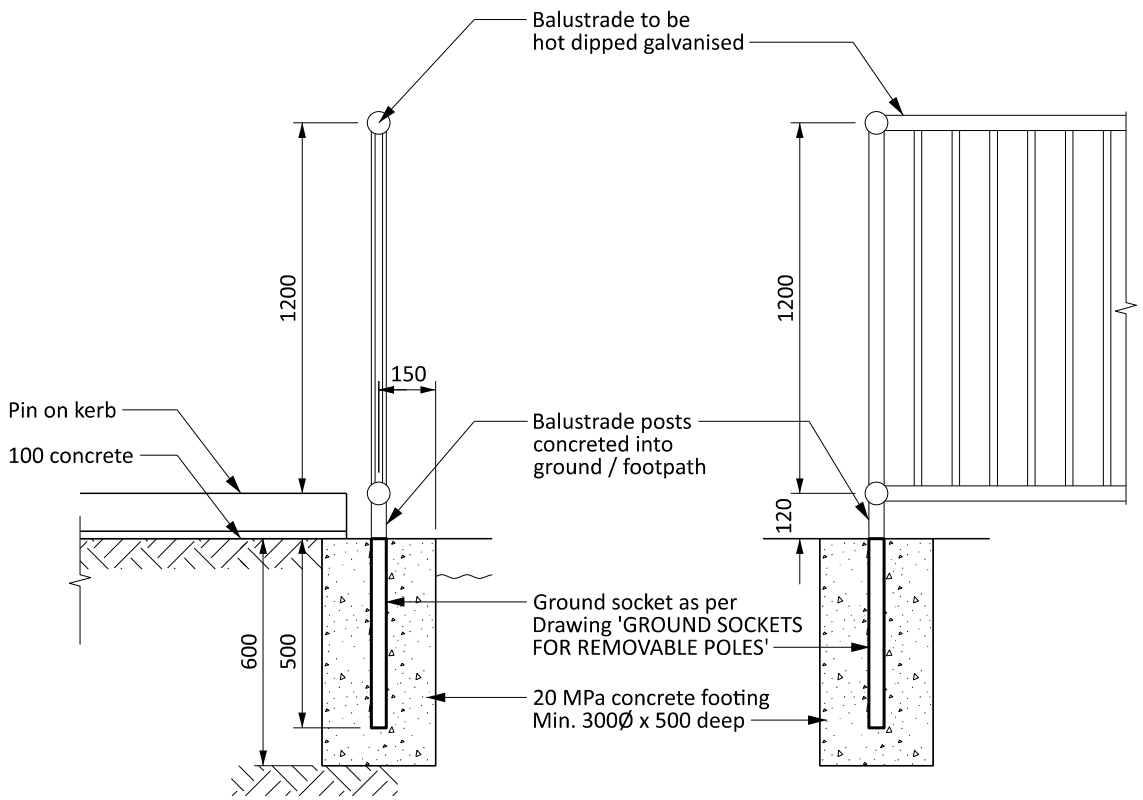

WEBFORGE BAL-1 BALUSTRADE

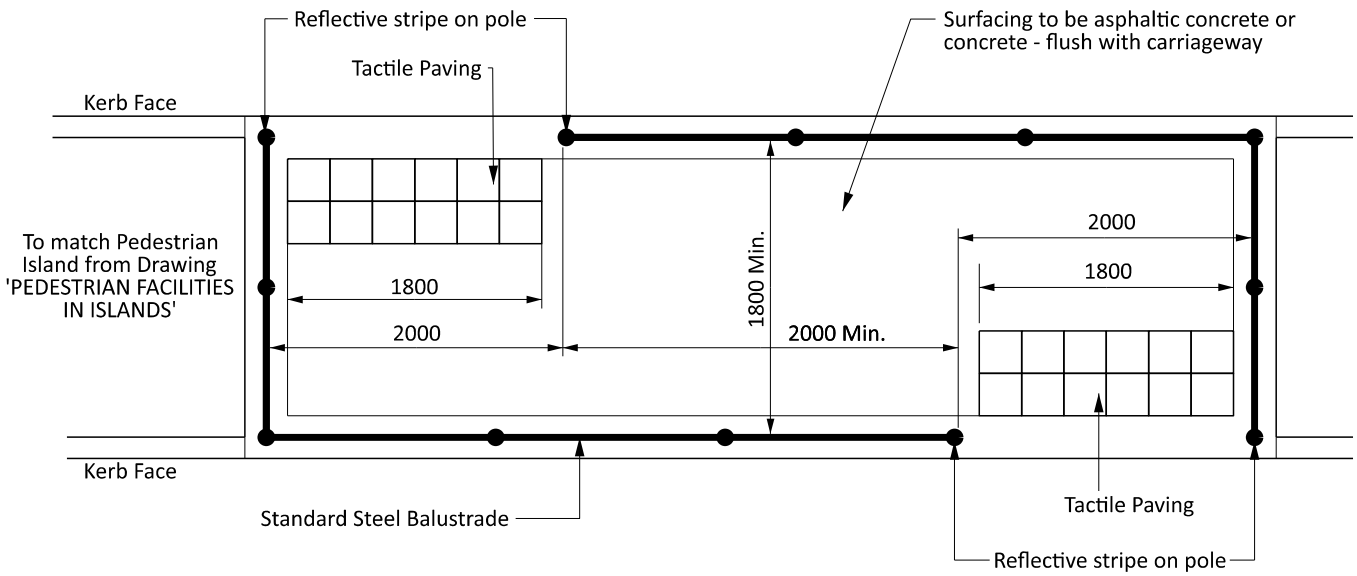

PEDESTRIAN BALUSTRADE BARRIER