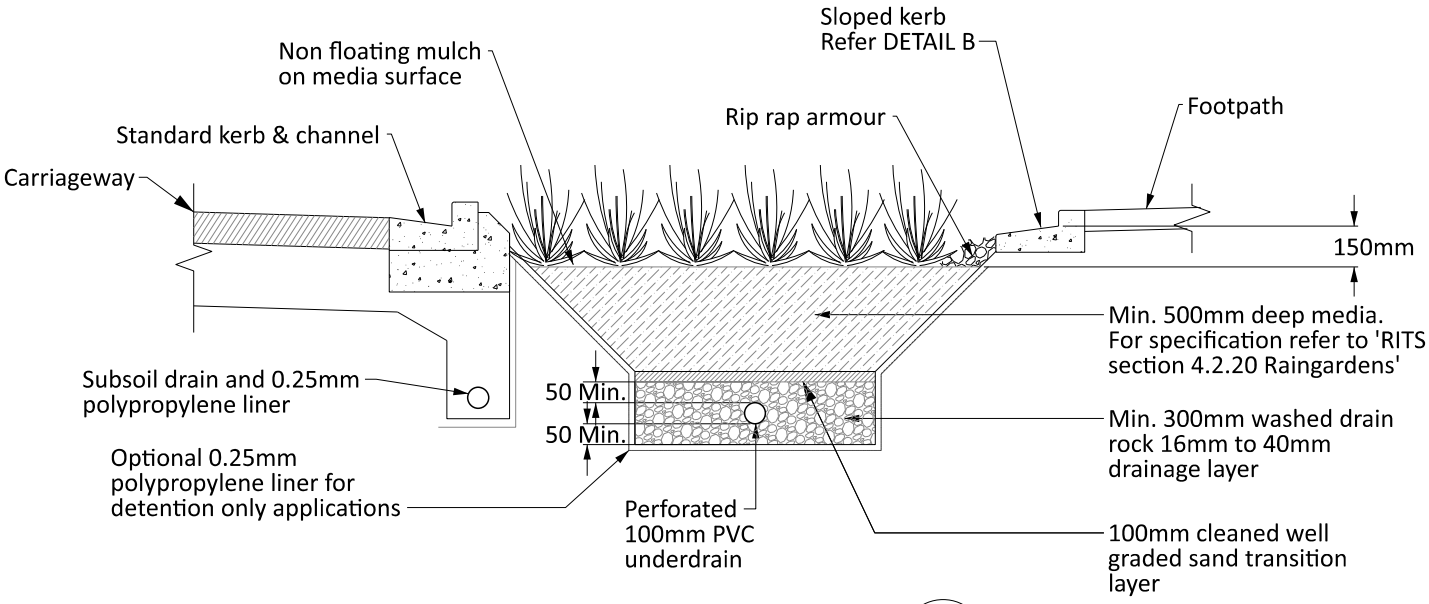

CROSS SECTION - SLOPED SIDES (A)

Not to Scale

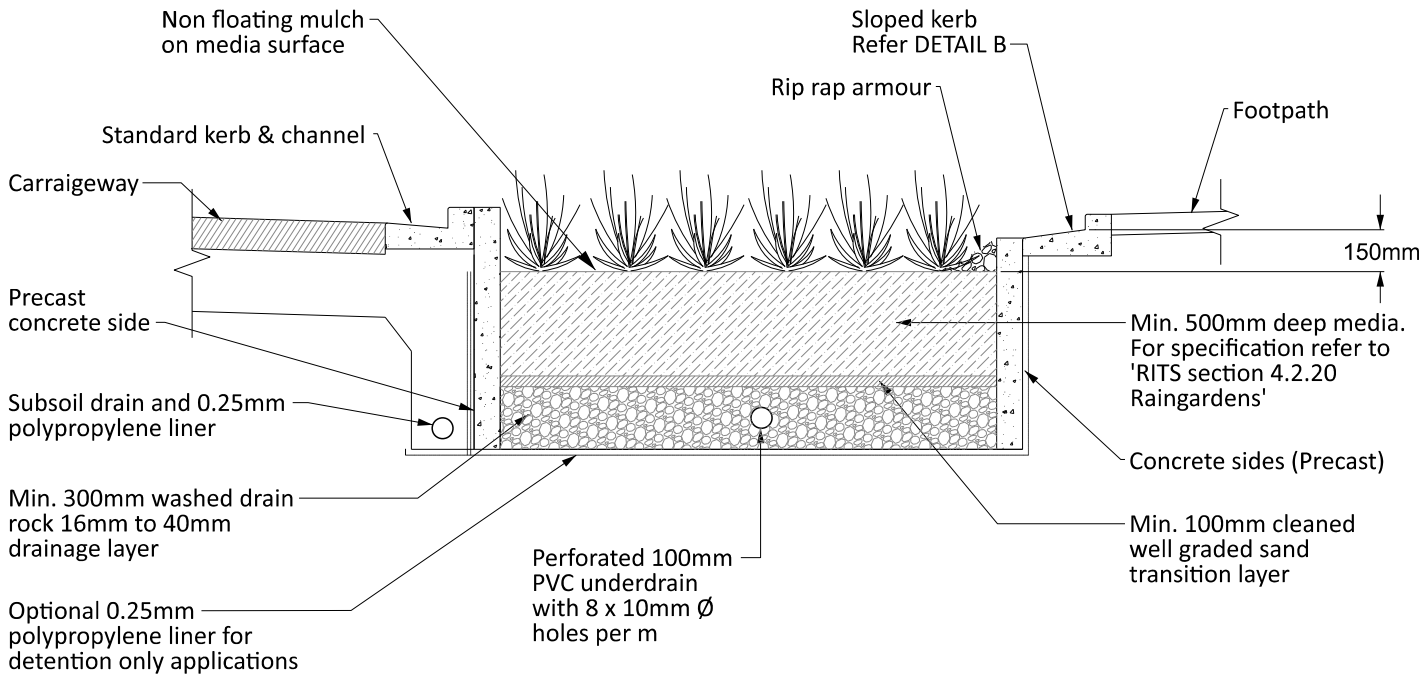

CROSS SECTION - VERTICAL SIDES (A)

Not to Scale

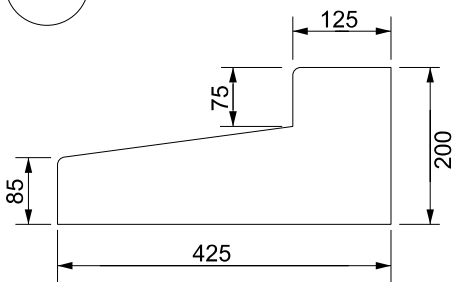

DETAIL B - KERB WITH SLOPED CHANNEL

Not to Scale

RAIN GARDEN DETENTION/SOAKAGE CROSS SECTIONS AND KERB DETAIL