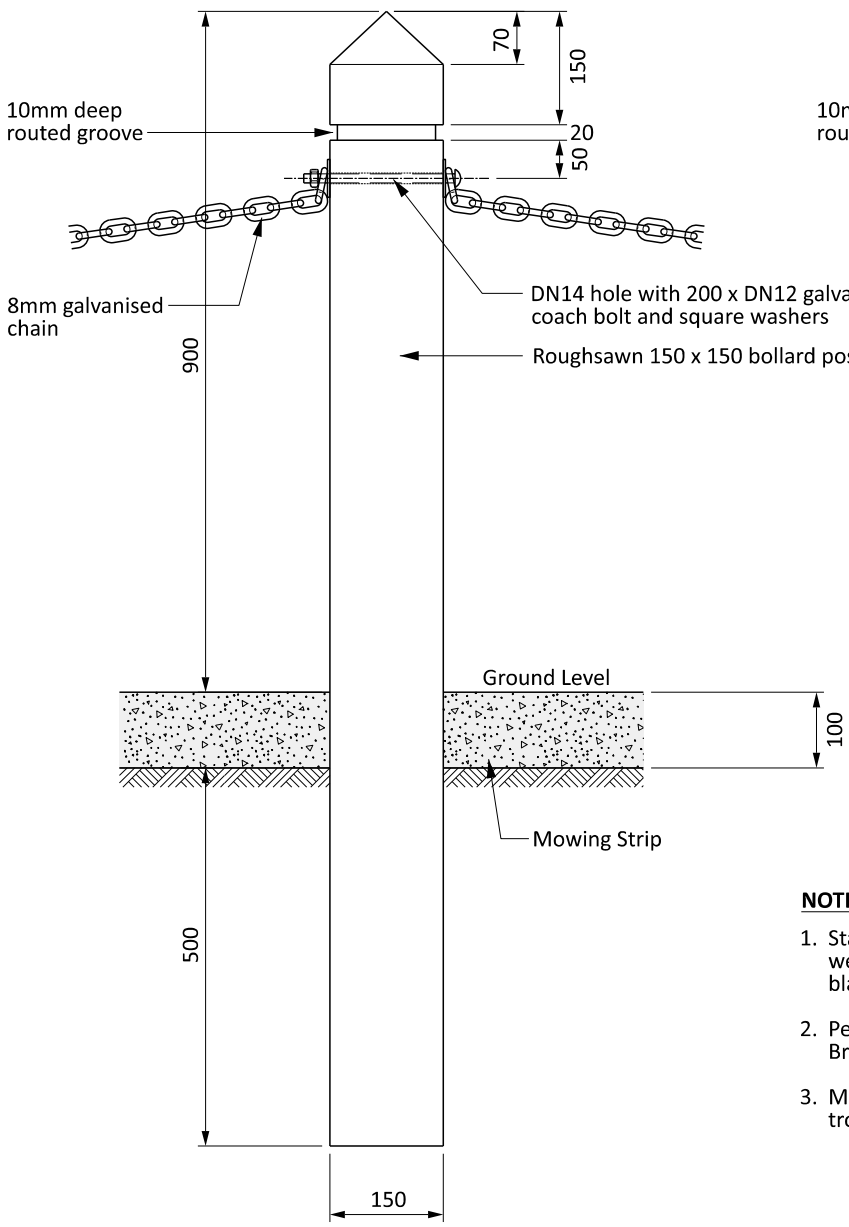

SIDE ELEVATION

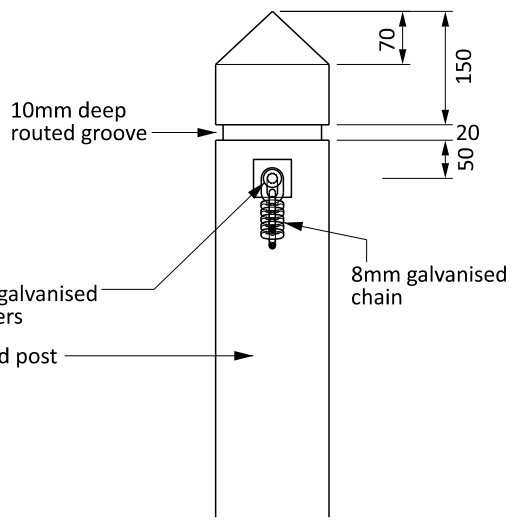

END ELEVATION DETAIL

NOTES:

1. Stain bollard post with 2 coats of Cabot's weather board and fence stain, base is blackbean, colour is charcoal 10L mix M8Y.
2. Pedestrian access of 1.5m every 9 metres. Broom finish mowing strip opening only.
3. Mowing strip - round edged and smooth trowelled 20MPa concrete.

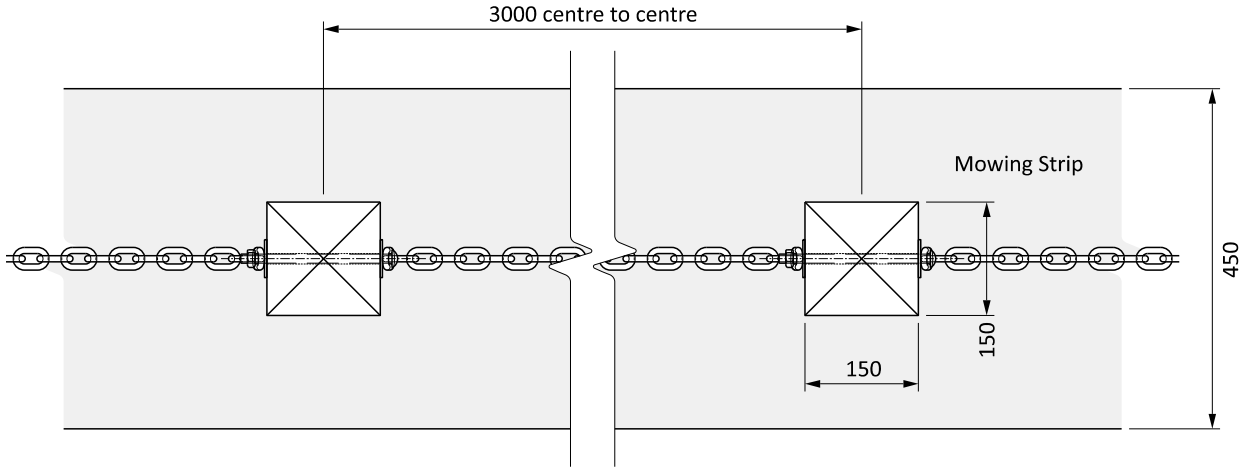

PLAN

CO-LAB
BETTER TOGETHER

TIMBER BOLLARD POST & CHAIN